MATERIALS LIST		
ITEMS	DESCRIPTION	NOTES
A	CBC-3500 TANK	
B	16" LID WITH LOCKING STRAP (OPTIONAL 21" TREADED LID)	
C	STEEL STAND FOR CBC-3500	

NOTES:

1. TANK IS MANUFACTURED TO ASTM-D-1998 STANDARD.
2. ALL DIMENSIONS ARE APPROXIMATE.

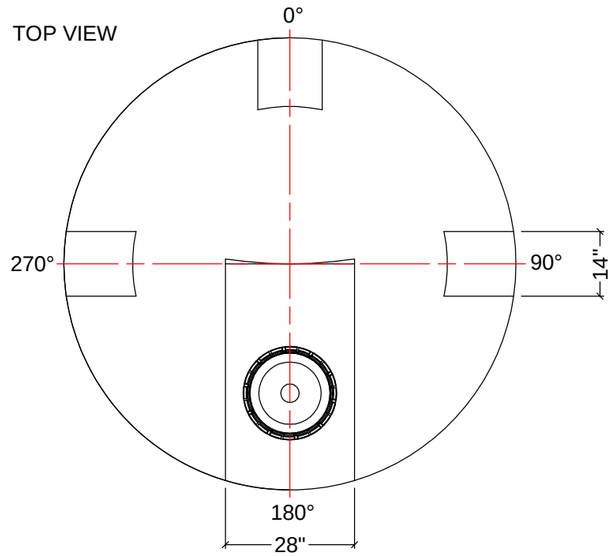

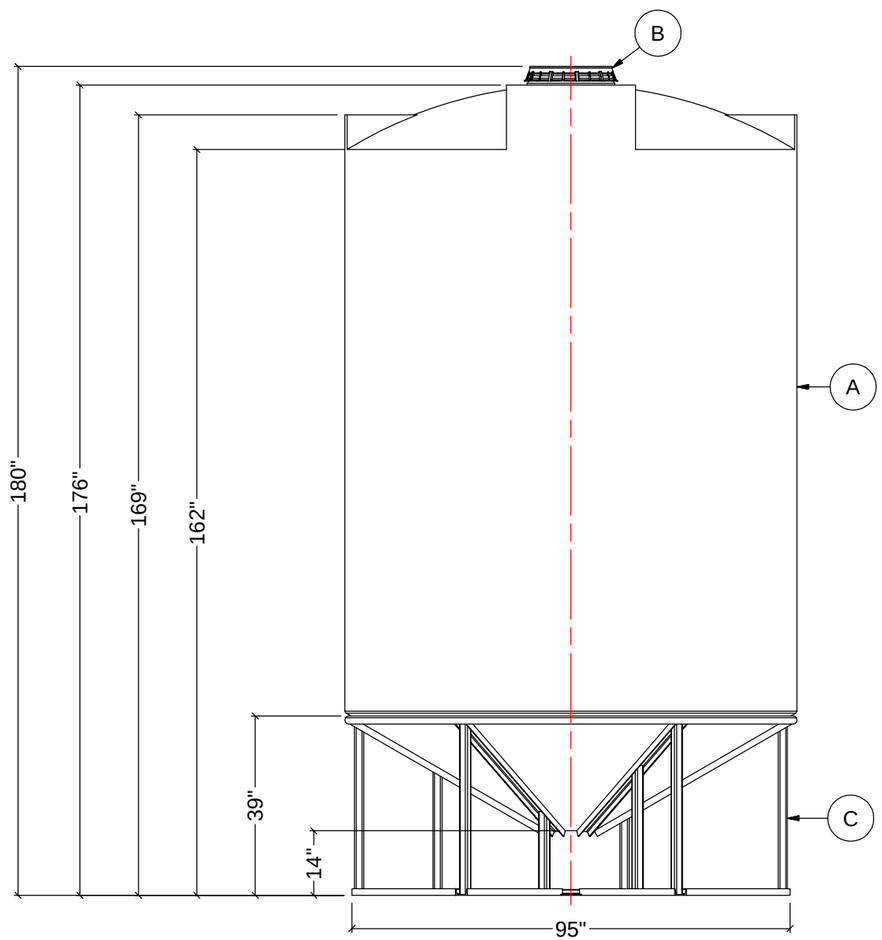

FRONT VIEW

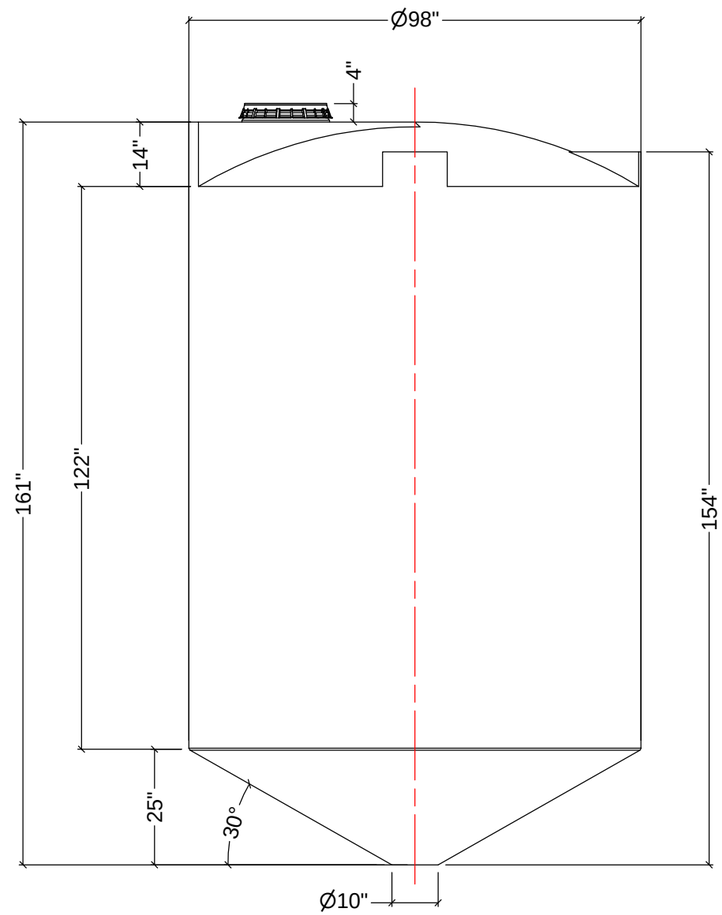

SIDE VIEW

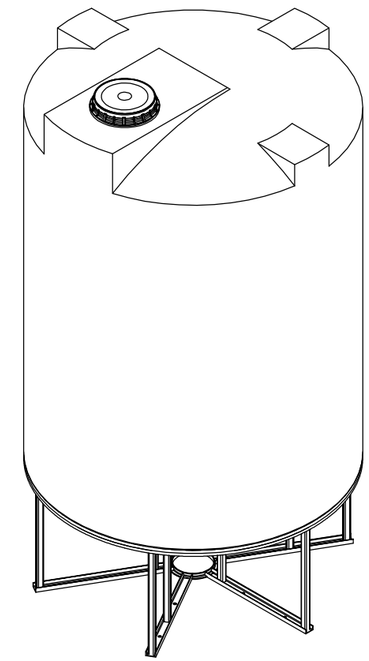

REV	DATE	DESCRIPTION	BY	APPD	REVD

REVISIONS

CUSTOMER

TITLE
CBC-3500 WITH STEEL STAND

ACO JOB NO:
PURCHASE ORDER NO:
PURCHASER'S EQUIP. NO:

THIS DRAWING IS THE PROPERTY OF ACO CONTAINER SYSTEMS LTD. AND SHALL NOT BE COPIED OR TRANSFERRED WITHOUT THE WRITTEN CONSENT OF ACO CONTAINER SYSTEMS LTD.

ENGINEERS SEAL

ACO CONTAINER SYSTEMS LTD.

PICKERING - ONTARIO - CANADA
ACO CONTAINER SYSTEMS LTD.
794 MCKAY RD.
PICKERING, ONTARIO, CANADA
L1W 2Y4
TEL. 905-683-8222
FAX 905-683-2969

DESIGNED	
DRAWN	WM
CHECKED	
APPROVED	
SCALE	N.T.S.
DATE	31-03-09

DWG No CBC-3500 REV 0